P-9031/2021/(34)/K/W WARD/FP/337 8/9

CONTENTS OF SHEET :
RERA CARPET AREA DIAGRAM & CALCULATION
SECTION = A - A & SECTION = B - B

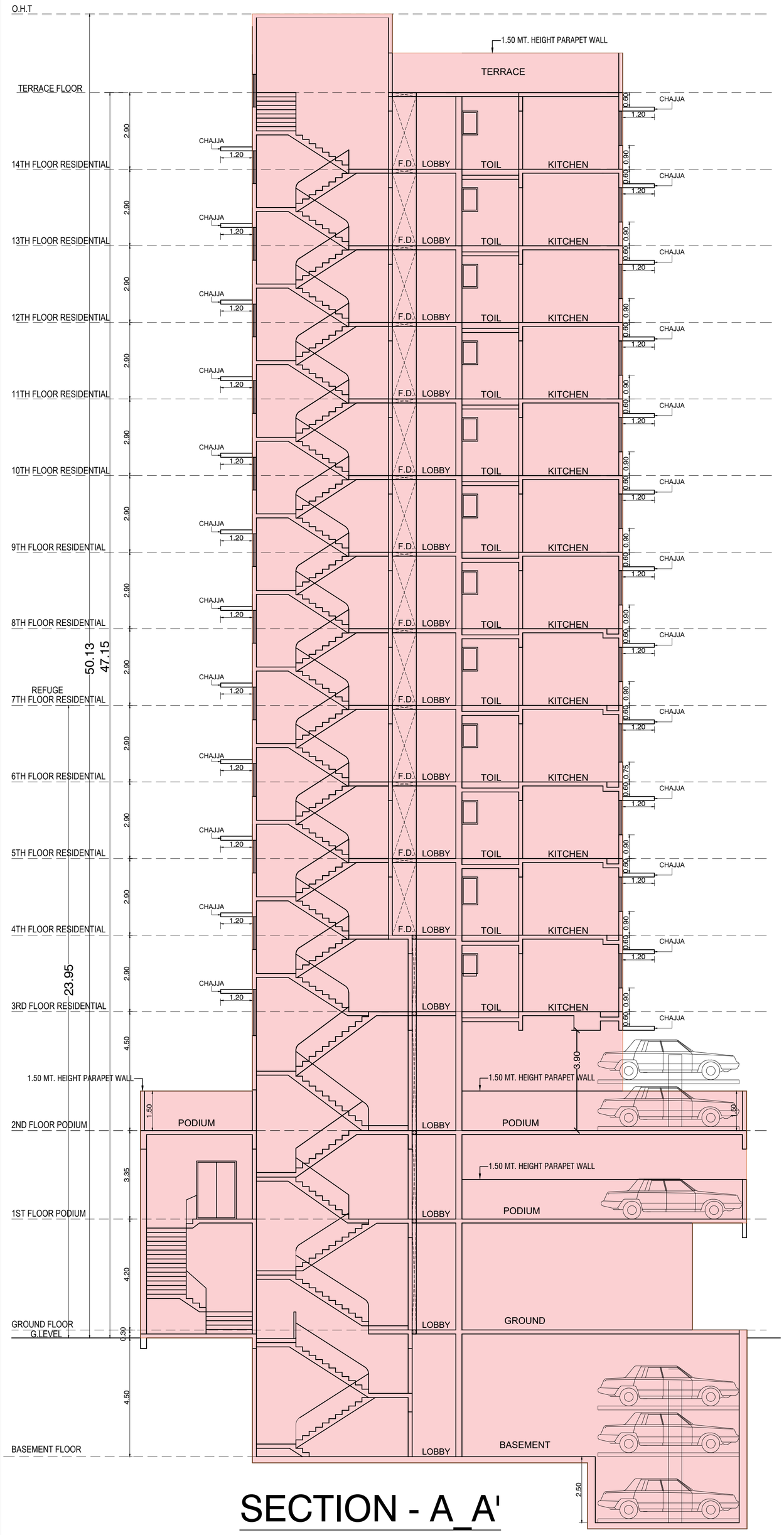

SECTION - A_A'

SCALE = 1:100

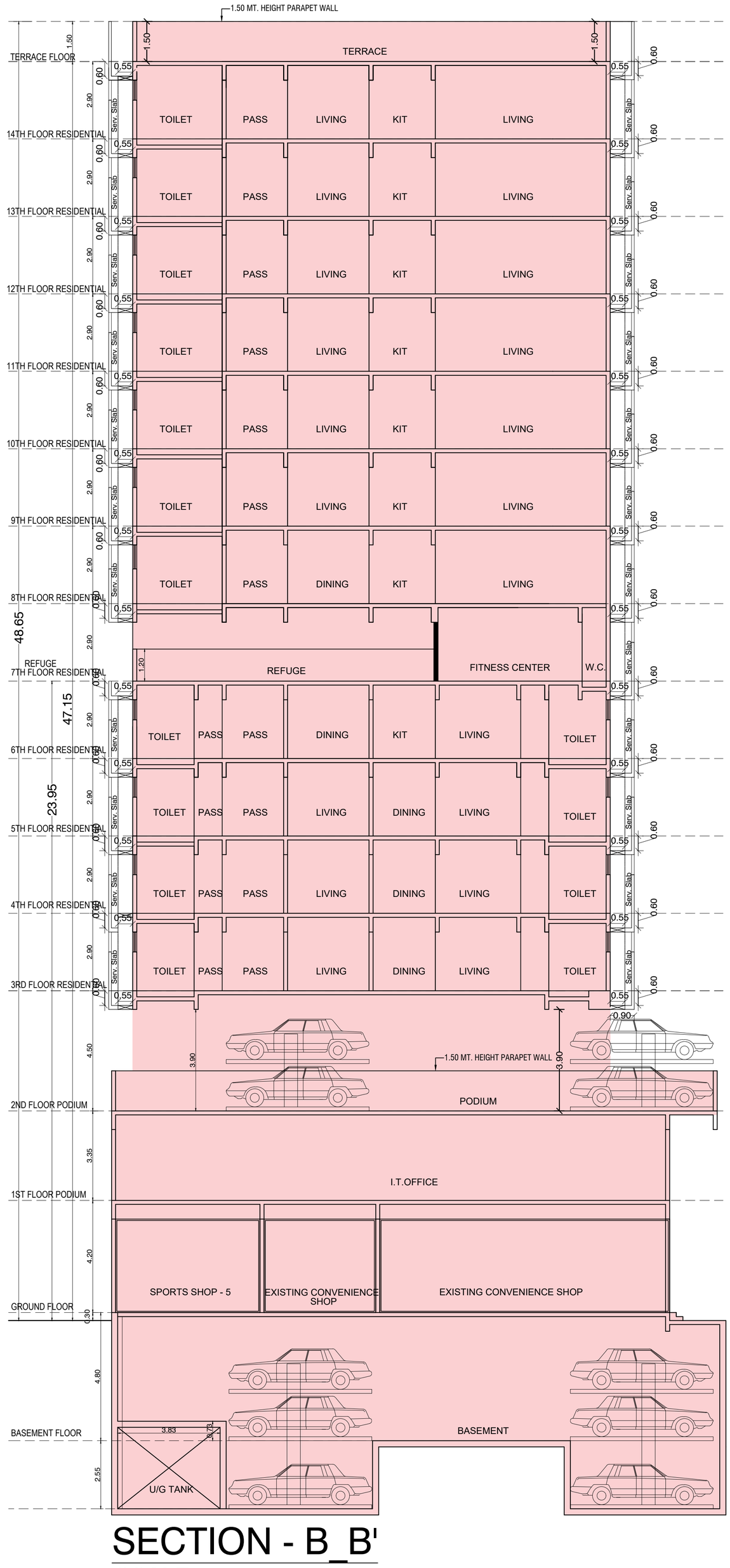

SECTION - B_B'

SCALE = 1:100

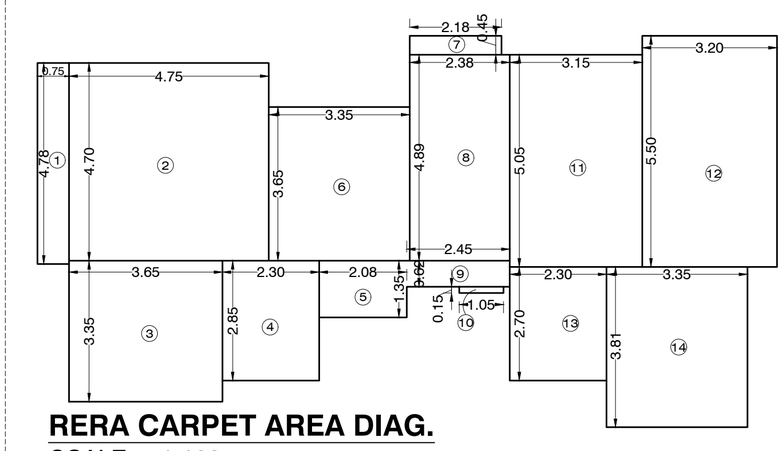

RERA CARPET AREA DIAG.

SCALE = 1:100 FLAT NO.1 & 2
8TH & 9TH FLOOR PLAN

RERA CARPET AREA CALCULATION FOR FLAT NO. 1 & 2 (8TH & 9TH FLOOR)

NO.	LENGTH	X	WIDTH	X	NOs.	TOTAL
STANDARD DEDUCTIONS						
1	0.75	X	4.78	X	1	3.59
2	4.75	X	4.70	X	1	22.33
3	3.65	X	3.35	X	1	12.23
4	2.30	X	2.85	X	1	6.55
5	2.08	X	1.35	X	1	2.81
6	3.35	X	3.65	X	1	12.23
7	2.18	X	0.45	X	1	0.98
8	2.38	X	4.89	X	1	11.64
9	2.45	X	0.62	X	1	1.52
10	1.05	X	0.15	X	1	0.16
11	3.15	X	5.05	X	1	15.91
12	3.20	X	5.50	X	1	17.60
13	2.30	X	2.70	X	1	6.21
14	3.35	X	3.81	X	1	12.76
TOTAL						126.50
NUMBER OF FLATS						02

THIS CANCELS APPROVAL TO THE PREVIOUS PLAN UNDER NO. P-9031/2021/(34)/K/W WARD/FP/337 DATED - 15/ 03/ 2023
APPROVED SUBJECT TO CONDITION MENTIONED
BY THIS OFFICE LETTER UNDER NO.
P-9031/2021/(34)/K/W WARD/FP/337 DATED 19.10.2023

PROFORMA-B

DESCRIPTION OF PROPOSAL AND PROPERTY

PROPOSED IOD PLAN FOR REDEVELOPMENT ON PLOT BEARING C.T.S. NO. 171 OF VILLAGE ANDHERI (W), F. P. NO. 34 OF TPS II ANDHERI, J. P. ROAD, ANDHERI (W), MUMBAI.

JOB No.	DRG. No.	CHECKED BY	DESIGN BY	DWG. BY	SCALE	DATE
				SHAILESH	1:100	

NORTH

NAME OF OWNER / C.A. TO OWNER / LESSEE

SHRI. AMIR AMANULLAH MOHAMED YUSUF, PROPRIETOR OF ARY DEVELOPERS

SHOP NO.1 DILKHUSH BUNGLOW
C.T.S. NO. 171 OF VILLAGE ANDHERI
J. P. ROAD, ANDHERI (W), MUMBAI. 400 058

DIGITAL SIGN. NAME OF OWNER / C.A. TO OWNER / LESSEE

AMIR AMANULLAH MOHAMED YUSUF
Digitally signed by AMIR AMANULLAH MOHAMED YUSUF
Date: 2023.10.18 18:01:47 +05'30'

NAME, ADDRESS OF ARCHITECT

ARUN GURAV LS NO. 840002661
SKYLINE
INFRAMART CONSULTANTS LLP.
Shop No.3, sarovar, vasant complex
Mahavir Nagar, Kandivali (West),
Mumbai 400 067.
office@skylineinfra.org

DIGITAL SIGN OF ARCHITECT

ARUN VISHRAM GURAV
Digitally signed by ARUN VISHRAM GURAV
Date: 2023.10.18 13:47:44 +05'30'

PLAN FOR APPROVAL

DIGITAL SIGNATURE OF AUTHORITIES

SHAILESH SHRIRAM RAKHONDE
S.E.B.P. (K / W S-1)

OMKAR DATTATRAY GIRKAR
A.E.B.P. (K / WEST)

RAJENDRA HILAL PAGAR
E.E.B.P. K / WEST WARD