

BUILT UP AREA CALCULATION

SOCIETY OFFICE						
1	0.50	X 7.26 X 1.10	X 1NO	=	3.99	SQ.MT.
2	0.50	X 7.26 X 3.63	X 1NO	=	13.18	SQ.MT.
		TOTAL ADDITION		=	17.17	SQ.MT. X

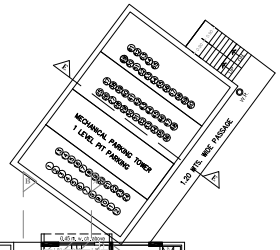

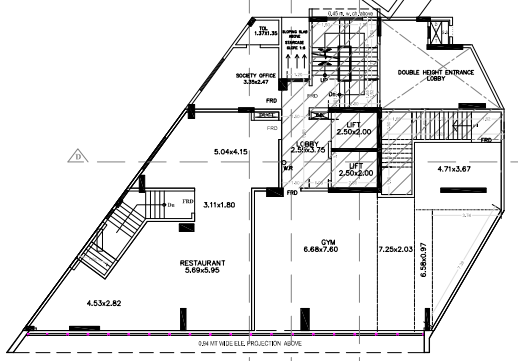

1ST FLOOR PLAN

SCALE - 1:100

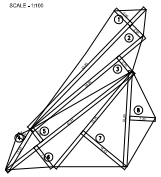

B.U.A. DIAGRAM FOR (PUMP RM.)
SCALE 1:100

BUILT UP AREA CALCULATION

PUMP ROOM						
1	0.50	X 3.71 X 0.83	X 1NO	=	1.73	SQ.MT.
2	0.50	X 3.71 X 1.37	X 1NO	=	2.54	SQ.MT.
		TOTAL ADDITION		=	4.27	SQ.MT. X



B.U.A. DIAGRAM FOR (S.TOIL)
SCALE 1:100

BUILT UP AREA CALCULATION

SER. TOILET						
1	0.50	X 2.57 X 0.65	X 1NO	=	0.84	SQ.MT.
2	0.50	X 2.57 X 1.03	X 1NO	=	1.32	SQ.MT.
		TOTAL ADDITION		=	2.16	SQ.MT. X

PLOT AREA DIAGRAM

SCALE - 1:500

PLOT AREA CALCULATION

1	0.50 X 45.45 X 6.90 X 1NO	=	156.80	SQ.MT.	
2	0.50 X 45.45 X 4.90 X 1NO	=	111.35	SQ.MT.	
3	0.50 X 39.96 X 5.70 X 1NO	=	113.89	SQ.MT.	
4	0.50 X 12.89 X 2.19 X 1NO	=	14.10	SQ.MT.	
5	0.50 X 43.81 X 4.45 X 1NO	=	97.48	SQ.MT.	
6	0.50 X 43.81 X 7.34 X 1NO	=	160.78	SQ.MT.	
7	0.50 X 33.75 X 15.43 X 1NO	=	260.38	SQ.MT.	
8	0.50 X 26.09 X 7.00 X 1NO	=	91.32	SQ.MT.	
	TOTAL ADDITION	=	1006.10	SQ.MT. X	

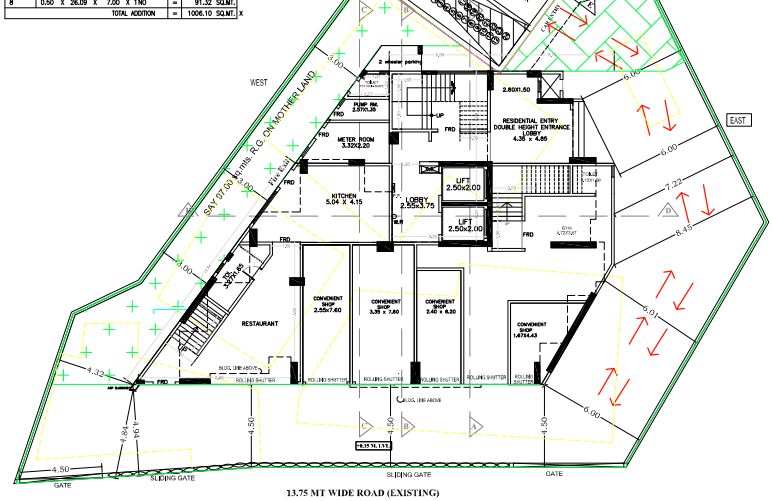

GROUND FLOOR PLAN

SCALE - 1:100

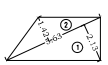

B.U.A. DIAGRAM FOR (METER ROOM)
SCALE 1:100

BUILT UP AREA CALCULATION

METER ROOM						
1	0.50	X 5.63 X 1.42	X 1NO	=	4.00	SQ.MT.
2	0.50	X 5.63 X 2.13	X 1NO	=	6.00	SQ.MT.
		TOTAL ADDITION		=	10.00	SQ.MT. X

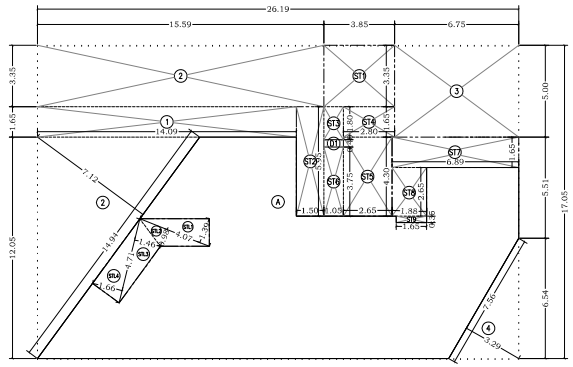

BUILT UP AREA CALCULATION

1ST FLOOR						
A	26.19	X 17.05	X 1NO	=	446.54	SQ.MT.
TOILET	(2.61 +3.65)	X 1.43	X 1/2 NO	=	4.48	SQ.MT.
		TOTAL ADDITION		=	451.02	SQ.MT. X

DEDUCTIONS

1	14.09	X 1.65	X 1NO	=	23.25	SQ.MT.
2	1/2 X 14.94	X 7.12	X 1NO	=	53.19	SQ.MT.
3	15.59	X 3.35	X 1NO	=	52.23	SQ.MT.
4	6.75	X 5.00	X 1NO	=	33.75	SQ.MT.
5	1/2 X 7.56	X 3.29	X 1NO	=	12.44	SQ.MT.
			TOTAL DEDUCTION	=	174.86	SQ.MT. Y1
TOTAL BUILT UP AREA [X – Y1]				=	271.68	SQ.MT. X1

STAIRCASE AREA CALCULATION

1ST FLOOR						
ST1	3.85	X 3.35	X 1NO	=	12.90	SQ.MT.
ST2	1.50	X 5.95	X 1NO	=	8.93	SQ.MT.
ST3	1.05	X 1.80	X 1NO	=	1.89	SQ.MT.
ST4	2.80	X 1.65	X 1NO	=	4.62	SQ.MT.
ST5	2.65	X 4.30	X 1NO	=	11.40	SQ.MT.
ST6	1.05	X 3.75	X 1NO	=	3.94	SQ.MT.
TOTAL STAIRCASE AREA PER FL. (1ST FLOOR)				=	43.68	SQ.MT. Y2

INTERIOR STAIRCASE AREA CALCULATION

1ST FLOOR						
STL1	1/2	X 4.07	X 1.39 X 1NO	=	2.83	SQ.MT.
STL2	1/2	X 4.07	X 0.98 X 1NO	=	1.99	SQ.MT.
STL3	1/2	X 4.71	X 1.46 X 1NO	=	3.44	SQ.MT.
STL4	1/2	X 4.71	X 1.66 X 1NO	=	3.91	SQ.MT.
ST7	6.89	X 1.65	X 1NO	=	11.37	SQ.MT.
ST8	1.88	X 2.65	X 1NO	=	4.98	SQ.MT.
ST9	1.65	X 0.35	X 1NO	=	0.58	SQ.MT.
TOTAL STAIRCASE LOBBY AREA PER FL (1ST FLOOR)				=	29.10	SQ.MT. Y3

DUCT AREA CALCULATION

1ST FLOOR						
D1	1.05	X 0.40	X 1NO	=	0.42	SQ.MT.
TOTAL DUCT AREA PER FL (1ST FLOOR)				=	0.42	SQ.MT. Y4

NET BUILT UP AREA [X1 – (Y2+Y3+Y4)]	=	198.48	SQ.MT.

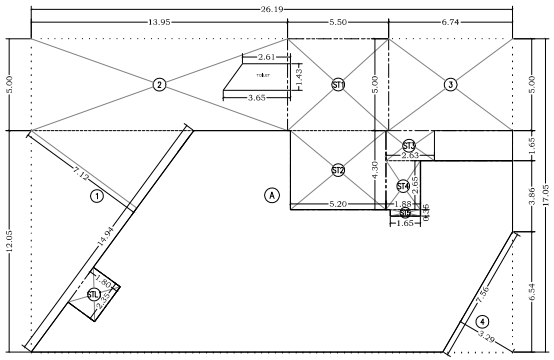

BUILT UP AREA CALCULATION

1ST FLOOR						
A	26.19	X 17.05	X 1NO	=	446.54	SQ.MT.
TOILET	(2.61 +3.65)	X 1.43	X 1/2 NO	=	4.48	SQ.MT.
		TOTAL ADDITION		=	451.02	SQ.MT. X

DEDUCTIONS

1	1/2 X 14.94	X 7.12	X 1NO	=	53.19	SQ.MT.
2	13.95	X 5.00	X 1NO	=	69.75	SQ.MT.
3	6.74	X 5.00	X 1NO	=	33.70	SQ.MT.
4	1/2 X 7.56	X 3.29	X 1NO	=	12.44	SQ.MT.
			TOTAL DEDUCTION	=	169.08	SQ.MT. Y1
TOTAL BUILT UP AREA [X – Y1]				=	281.94	SQ.MT. X1

STAIRCASE AREA CALCULATION

GROUND FLOOR						
ST1	5.50	X 5.00	X 1NO	=	27.50	SQ.MT.
ST2	5.20	X 4.30	X 1NO	=	22.36	SQ.MT.
TOTAL STAIRCASE AREA PER FL. (GROUND FLOOR)				=	49.86	SQ.MT. Y2

INTERIOR STAIRCASE AREA CALCULATION

GROUND FLOOR						
STL1	2.35	X 1.80	X 1NO	=	4.23	SQ.MT.
ST3	2.63	X 1.65	X 1NO	=	4.34	SQ.MT.
ST4	1.88	X 2.65	X 1NO	=	4.98	SQ.MT.
ST5	1.65	X 0.35	X 1NO	=	0.58	SQ.MT.
TOTAL STAIRCASE LOBBY AREA PER FL (GROUND FLOOR)				=	14.13	SQ.MT. Y3

NET BUILT UP AREA [X1 – (Y2+Y3)]	=	217.95	SQ.MT.

SUMMARY OF BUILT UP AREA

FLOOR	BUA PER FLOOR	STAIRCASE / LIFT LOBBY AREA	COMM. INTERIOR STAIRCASE LOBBY AREA	TENEMENT	
GROUND FLOOR	217.95 SQ.MT.	49.86 SQ.MT.	14.13 SQ.MT.	COMM.	
1ST FLOOR	198.48 SQ.MT.	43.68 SQ.MT.	29.10 SQ.MT.	COMM.	
2ND FLOOR	219.93 SQ.MT.	43.41 SQ.MT.	———	02	NOS.
3RD FLOOR	222.07 SQ.MT.	43.41 SQ.MT.	———	02	NOS.
4TH FLOOR	222.07 SQ.MT.	43.41 SQ.MT.	———	02	NOS.
5TH FLOOR	222.07 SQ.MT.	43.41 SQ.MT.	———	02	NOS.
6TH FLOOR	222.07 SQ.MT.	43.41 SQ.MT.	———	02	NOS.
7TH FLOOR	222.07 SQ.MT.	43.41 SQ.MT.	———	02	NOS.
8TH FLOOR	113.83 SQ.MT. 0.24 SQ.MT. 0.85 SQ.MT.	43.41 SQ.MT.	———	01	NOS.
9TH FLOOR	222.07 SQ.MT.	43.41 SQ.MT.	———	02	NOS.
10TH FLOOR	222.07 SQ.MT.	43.41 SQ.MT.	———	02	NOS.
11TH FLOOR	222.07 SQ.MT.	43.41 SQ.MT.	———	02	NOS.
12TH FLOOR	220.24 SQ.MT.	43.41 SQ.MT.	———	02	NOS.
13TH FLOOR	220.24 SQ.MT.	43.41 SQ.MT.	———	02	NOS.
TOTAL	2988.12 SQ.MT.	614.46 SQ.MT.	43.23 SQ.MT.	23	NOS.

GROSS B.U.A FOR SCRUTINY FEES = 5,460.00 SQ.MT.

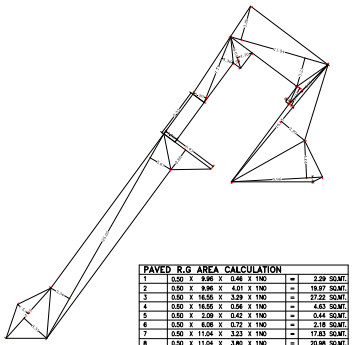

PAVED R.G AREA CALCULATION

1	0.50 X 9.96 X 0.46 X 1NO	=	2.29	SQ.MT.	
2	0.50 X 9.96 X 4.01 X 1NO	=	19.97	SQ.MT.	
3	0.50 X 16.55 X 3.29 X 1NO	=	27.22	SQ.MT.	
4	0.50 X 16.55 X 0.56 X 1NO	=	4.63	SQ.MT.	
5	0.50 X 2.09 X 0.42 X 1NO	=	0.44	SQ.MT.	
6	0.50 X 6.08 X 0.72 X 1NO	=	2.18	SQ.MT.	
7	0.50 X 11.04 X 3.23 X 1NO	=	17.83	SQ.MT.	
8	0.50 X 11.04 X 3.80 X 1NO	=	20.96	SQ.MT.	
9	0.50 X 3.61 X 1.70 X 1NO	=	3.07	SQ.MT.	
10	0.50 X 3.61 X 0.57 X 1NO	=	1.03	SQ.MT.	
11	0.50 X 7.71 X 1.50 X 1NO	=	5.78	SQ.MT.	
12	0.50 X 7.71 X 1.36 X 1NO	=	5.24	SQ.MT.	
TOTAL PAVED R.G AREA		=	110.26	SQ.MT.	Y3

R.G. ON MOTHER LAND AREA CALCULATION

1	0.50 X 6.43 X 2.68 X 1NO	=	8.62	SQ.MT.	
2	0.50 X 25.45 X 2.61 X 1NO	=	33.47	SQ.MT.	
3	0.50 X 25.45 X 2.34 X 1NO	=	30.01	SQ.MT.	
4	0.50 X 7.35 X 1.51 X 1NO	=	5.55	SQ.MT.	
5	0.50 X 7.35 X 3.31 X 1NO	=	12.16	SQ.MT.	
6	5.35 X 1.50 X 1NO	=	8.03	SQ.MT.	
TOTAL R.G. ON MOTHER LAND		=	97.84	SQ.MT.	Y3

TOTAL RG	=	208.10	SQ.MT.

A	PROFORMA 'A'		
1	Area of Plot	1006.10	sqmt.
	(a) Area of Reservation in plot	NIL	
	(b) Area of Road Set back	NIL	
	(c) Area of D.P.Road	NIL	
2	DEDUCTIONS FOR :-		
	(A) For Reservation/Road Area	NIL	
	(a) Road setback area to be handed over (100%) (Regulation No 16)	NIL	
	(b) Proposed D.P.road to be handed over (100%) (Regulation No 18)	NIL	
	(c) (i) Reservation area to be handed over (100%) (Regulation No 17)	NA	
	(ii) Reservation area to be handed over as per AR (Regulation No 17)	NA	
	(B) For Amenity area	NIL	
	(a) Area of amenity plot/plots to be handed over as per DCR 14(A)	NIL	
	(b) Area of amenity plot/plots to be handed over as per DCR 14(B)	NIL	
	(c) DeDUCTIONS for Existing BUA to be retained if any/ Land component of Existing BUA (Existing BUA as per Regulation under which the development was allowed.	NIL	
3	Total deDUCTIons ( )(2A) +(2B)+ -(2C) as and when applicable)	NIL	
4	Balance area of plot (1 minus 3)	1006.10	sqmt.
5	Plot area under Development after areas to be handed over to MCGM / Appropriate Authority as per Sr. No. 4 above.	1006.10	sqmt.
6	Zonal (basic) FSI (0.50 or 0.75 or 1 or 1.33)	1.00	
7	a) Built up Area as per Zonal(basic) FSI (Sr.5 6)	1006.10	sqmt.
	b) Permissible BUA as per Regulation 30(c)(Prorected Development)	—	sqmt.
	Permissible Built up Area(7a or 7b whichever is higher)	—	sqmt.
8	Built up area equal to area of land handed over as per Regulation 30(A)	—	
	(i)As per 2(A) and 2(B) except 2(A)(c)	—	
	(ii) above with in cap of "Admissible TDR" as column 6 of Table -12 on remaining /balance plot.)	NIL	
	(iii) In case of 2(A)(c) (ii) permissible over and above permissible BUA on remaining / balance plot.	NIL	
9	Additional Incentive BUA within the cap of "ADMISSIBLE TDR" As per table 12 on Balance Plot	—	
	(a) In lieu of cost construction of amenity building as per regulation 30(A)(3)(b)	—	
	(b) 10% of SRA No. To above or 10 sqmts per rehab tenement as per reg. 33(7)(B) (10 sq.mt.x 10 T/S)	—	
	(c) 50% of rehab component as per regulation 33(7)(A)	—	
	Total Additional BUA / Incentive Area	—	
10	Built up area due to "Additional FSI on Payment of Premium" as per Table No 12 of Regulation No 30(A) on remaining/ balance plot. (1006.10 x 0.50%) = 503.05 SQ.MT	503.05	sqmt.
11	Built up area due to admissible "TDR" as per Table No 12 of Regulation No 30(A) and 32 on remaining / balance plot. (1006.10 x 0.70%) = 704.27 SQ.MT	DRC. NO. SRA/1402/Cons.e 185/21 DRC. NO. SRA/1439/Lprdn 189/07 DRC. NO. Res/0006/2021e 263.83 DRC. NO. Res/0013/2021e 90.97 TOTAL 764.48 sqmt.	RESTRICTED TO 704.27 sqmt.
12	Permissible Built up Area as the case may be with/Without BUA as per 2(c)	2213.42	sqmt.
13	a) Proposed non- residential BUA	309.74	sqmt.
	b) Proposed residential BUA	1903.69	sqmt.
	Proposed BUA	2213.43	sqmt.
14	TDR generated if any as per regulation 30 (A) and 32.	NIL	
15	Fungible Compensatory Area as per Regulation No 31(3)		
(a)	i) Permissible Fungible Compensatory area for purely residential	668.00	sqmt.
	ii) Permissible Fungible Compensatory area for non - residential	106.69	sqmt.
(b)	i) Proposed Fungible Compensatory area for Rehab purely residential component	100.49	sqmt.
	ii) Proposed Fungible Compensatory area for Rehab non - residential component	46.21	sqmt.
(c)	i) Proposed Fungible Compensatory area for Sale purely residential component (By Charging Premium)	567.51	sqmt.
	ii) Proposed Fungible Compensatory area for Sale non - residential component (By Charging Premium)	60.48	sqmt.
16	Total Built up Area proposed Including Fungible Compensatory Area (13 +15(a)(i) +15(b)(i)	2988.12	sqmt.
17	FSI consumed on Net Plot (13/4)	—	
(B)	Other Requirements	NA	
	(A) Reservation/Designation		
	a) Name of Reservation		
	b) Area of Reservation affecting the plot		
	c) Area of Reservation land to be handed/handed over as per Regulation No.17		
	d) Built up area of Amenity to be handed over as per Regulation No.17	NA	
	e) Area of built up Area of Designation		
	(B) Plot area/Built up Amenity to be Handed Over as per Regulation No		
	(i) 14(A)		
	(ii) 14(B)		
	(iii) 15		
	(C) Requirement of Recreational Open Space in Layout/Plot as per Regulation No.27	NA	
	(D) Tenement Statement		
	(i) Proposed built up area (13 above)	2988.12	sqmt.
	(ii) Less deDUCTion of Non-residential area (Shop etc.)	416.43	sqmt.
	(iii) Area available for tenements (ii) minus (ii)	2571.69	sqmt.
	(iv) Tenements permissible (Density of tenements/hectare)	116.00	
	(v) Total number of Tenements proposed on the plot	23.00	
(C)	Parking Statement		
	(i) _Parking required by Regulations for,-	65.00	
	Car		
	Scooter/Motor cycle		
	Outsiders (Visitors)		
	(ii) Covered garage permissible		
	(iii) Covered garages proposed		
	Car		
	Scooter/Motor cycle		
	Outsider (Visitors)		
	(iv) Total parking provided	65.00	
(D)	Transport Vehicles Parking		
	(i) Spaces for transport vehicles parking required by Regulations		
	(ii) Total No. of transport vehicles parking spaces provided		

STAMP AND DATE OF APPROVAL OF PLAN

THIS CANCELS APPROVAL TO PLANS SANCTIONED UNDER NO.- P-6264/2021(1269)/M/W WARD/ CHEMBUR-W/0370 /KDP/ NEW DT. 25.01.2022.

APPROVED SUBJECT TO THE CONDITIONS MENTIONED IN THIS OFFICE LETTER NO.- P-6264/2021(1269)/M/W Ward/CHEMBUR-W/0370/Amend.

PRASAD CHAND RAKANT GOSAVI
S.E.(B.P.) W-I

Nanasaheb Ramsing Kenjale
A.E.(B.P.) 'M' WARD

Bajirao Lahu Patil
E.E.-II (B.P.) E.S.

PROFORMA B

CONTENTS OF SHEET

BLOCK & LOCATION PLAN, B.U.A. STATEMENT, PARKING AREA STATEMENT, GR, 1ST 2ND FL. PLANS, PLOT AREA DIAGRAM, B.U.A. CALCULATIONS, C.A. STATEMENT.

CERTIFICATE OF AREA

CERTIFIED THAT I HAVE SURVEYED THE PLOT UNDER REFERENCE ON 04-07-2021 AND THAT THE DIMENSIONS OF THE SIDES, etc., OF THE PLOT STATED ON THE PLAN ARE AS MEASURED ON SITE AND THE AREA SO WORKED IS 1006.10 SQ. MTS. AND TALLIES WITH THE AREA STATED IN THE DOCUMENT OF OWNERSHIP/TOWN PLANNING SCHEME RECORDS.

Nandkumar Jagannath Shringarpure
ARCHITECT

DESCRIPTION OF PROPOSAL AND PROPERTY

Proposed reconstruction redevelopment of existing structures on plot bearing CTS No. 1269, 1269/1 to 17 of village Chembur in Chembur Gaothan in 'M' West Ward, Chembur, Mumbai.

NAME OF OWNER :

DINESH PARASRAM THAPAR
M/s. Sampeet Properties Pvt. Ltd.

DATE	JOB. NO.	DRG. NO.	SCALE	DRAWN BY	CHECKED BY
		01	AS SHOWN	KRISHNA	N.J.SHRINGARPURE

NORTH LINE AS SHOWN

NAME, ADDRESS AND SIGNATURE OF ARCHITECT

NORTH

NAMBARCH
D/371, 10th ROAD, CHEMBUR, MUMBAI- 400 071.
tel. 022 2528 08 86.

Nandkumar Jagannath Shringarpure
Mr. N.J.SHRINGARPURE (ARCHITECT)

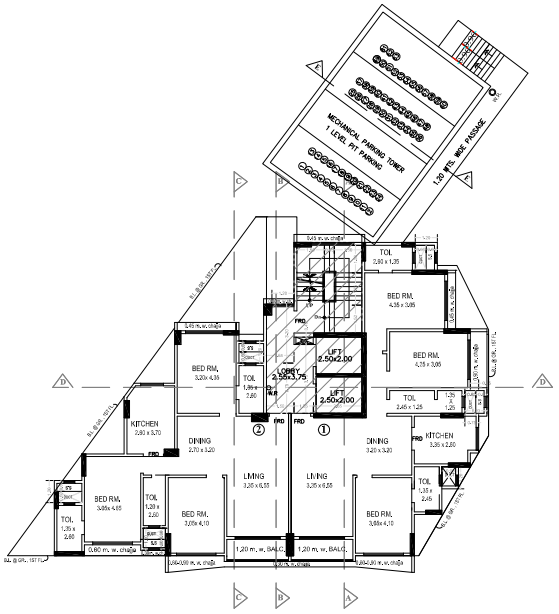

3RD TO 7TH & 9TH TO 11TH FLOOR PLAN

SCALE - 1:100

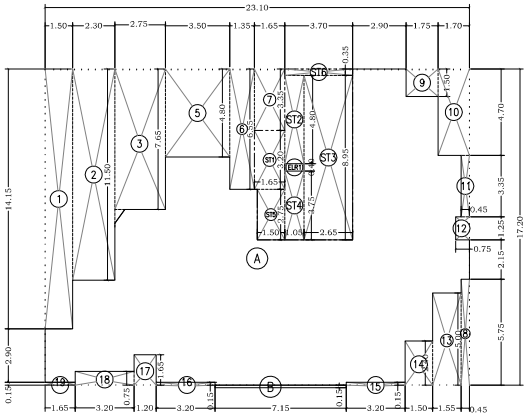

B.U.A. DIAGRAM FOR (3RD TO 7TH & 9TH TO 11TH FLOOR)

SCALE 1:100

BUILT UP AREA CALCULATION

3RD TO 7TH & 9TH TO 11TH FLOOR						
A	23.10	X	17.20	X 1NO	=	397.32 SQ.MT.
B	7.15	X	0.15	X 1NO	=	1.07 SQ.MT.
				TOTAL ADDITION	=	398.39 SQ.MT. X

DEDUCTIONS						
1	1.50	X	14.15	X 1NO	=	21.23 SQ.MT.
2	2.30	X	11.50	X 1NO	=	26.45 SQ.MT.
3	2.75	X	7.65	X 1NO	=	21.04 SQ.MT.
5	3.50	X	4.80	X 1NO	=	16.80 SQ.MT.
6	1.35	X	6.55	X 1NO	=	8.84 SQ.MT.
7	1.65	X	3.35	X 1NO	=	5.53 SQ.MT.
8	0.45	X	5.75	X 1NO	=	2.59 SQ.MT.
9	1.75	X	1.50	X 1NO	=	2.63 SQ.MT.
10	1.70	X	4.70	X 1NO	=	7.99 SQ.MT.
11	0.45	X	3.35	X 1NO	=	1.51 SQ.MT.
12	0.75	X	1.25	X 1NO	=	0.94 SQ.MT.
13	1.55	X	5.00	X 1NO	=	7.75 SQ.MT.
14	1.50	X	2.40	X 1NO	=	3.60 SQ.MT.
15	3.20	X	0.15	X 1NO	=	0.48 SQ.MT.
16	3.20	X	0.15	X 1NO	=	0.48 SQ.MT.
17	1.20	X	1.65	X 1NO	=	1.98 SQ.MT.
18	3.20	X	0.75	X 1NO	=	2.40 SQ.MT.
19	1.65	X	0.15	X 1NO	=	0.25 SQ.MT.
				TOTAL DEDUCTION	=	132.49 SQ.MT. Y1
TOTAL BUILT UP AREA [X – Y1]					=	265.90 SQ.MT. X1

STAIRCASE AREA CALCULATION

2ND TO 7TH & 9TH TO 11 FLOOR						
ST1	1.65	X	3.20	X 1NO	=	5.28 SQ.MT.
ST2	1.05	X	4.80	X 1NO	=	5.04 SQ.MT.
ST3	2.65	X	8.95	X 1NO	=	23.72 SQ.MT.
ST4	1.05	X	3.75	X 1NO	=	3.94 SQ.MT.
ST5	1.50	X	2.75	X 1NO	=	4.13 SQ.MT.
ST6	3.70	X	0.35	X 1NO	=	1.30 SQ.MT.
TOTAL STAIRCASE AREA PER FL.					=	43.41 SQ.MT. Y2

ELEC RM AREA CALCULATION

2ND TO 7TH & 9TH TO 11 FLOOR						
ELR1	1.05	X	0.40	X 1NO	=	0.42 SQ.MT.
TOTAL ELEC RM AREA PER FL.					=	0.42 SQ.MT. Y3

NET BUILT UP AREA [X1 – (Y2+Y3)]	=	222.07 SQ.MT.

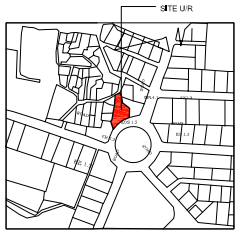

LOCATION PLAN

SCALE - 1:4000

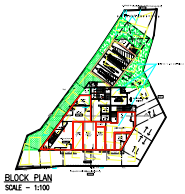

BLOCK PLAN

SCALE – 1:100



2ND FLOOR PLAN

SCALE - 1:100

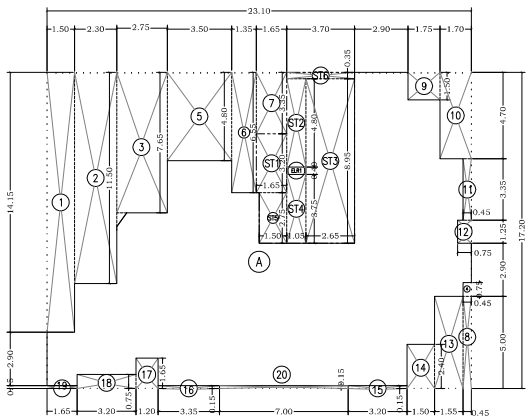

B.U.A. DIAGRAM FOR (2ND FLOOR)

SCALE 1:100

BUILT UP AREA CALCULATION

2ND FLOOR						
A	23.10	X	17.20	X 1NO	=	397.32 SQ.MT.
				TOTAL ADDITION	=	397.32 SQ.MT. X

DEDUCTIONS						
1	1.50	X	14.15	X 1NO	=	21.23 SQ.MT.
2	2.30	X	11.50	X 1NO	=	26.45 SQ.MT.
3	2.75	X	7.65	X 1NO	=	21.04 SQ.MT.
4	0.45	X	0.75	X 1NO	=	0.34 SQ.MT.
5	3.50	X	4.80	X 1NO	=	16.80 SQ.MT.
6	1.35	X	6.55	X 1NO	=	8.84 SQ.MT.
7	1.65	X	3.35	X 1NO	=	5.53 SQ.MT.
8	0.45	X	5.00	X 1NO	=	2.25 SQ.MT.
9	1.75	X	1.50	X 1NO	=	2.63 SQ.MT.
10	1.70	X	4.70	X 1NO	=	7.99 SQ.MT.
11	0.45	X	3.35	X 1NO	=	1.51 SQ.MT.
12	0.75	X	1.25	X 1NO	=	0.94 SQ.MT.
13	1.55	X	5.00	X 1NO	=	7.75 SQ.MT.
14	1.50	X	2.40	X 1NO	=	3.60 SQ.MT.
15	3.20	X	0.15	X 1NO	=	0.48 SQ.MT.
16	3.35	X	0.15	X 1NO	=	0.50 SQ.MT.
17	1.20	X	1.65	X 1NO	=	1.98 SQ.MT.
18	3.20	X	0.75	X 1NO	=	2.40 SQ.MT.
19	1.65	X	0.15	X 1NO	=	0.25 SQ.MT.
20	7.00	X	0.15	X 1NO	=	1.05 SQ.MT.
				TOTAL DEDUCTION	=	133.56 SQ.MT. Y1
TOTAL BUILT UP AREA [X – Y1]					=	263.76 SQ.MT. X1

STAIRCASE AREA CALCULATION

2ND FLOOR						
ST1	1.65	X	3.20	X 1NO	=	5.28 SQ.MT.
ST2	1.05	X	4.80	X 1NO	=	5.04 SQ.MT.
ST3	2.65	X	8.95	X 1NO	=	23.72 SQ.MT.
ST4	1.05	X	3.75	X 1NO	=	3.94 SQ.MT.
ST5	1.50	X	2.75	X 1NO	=	4.13 SQ.MT.
ST6	3.70	X	0.35	X 1NO	=	1.30 SQ.MT.
TOTAL STAIRCASE AREA PER FL.					=	43.41 SQ.MT. Y2

ELEC RM AREA CALCULATION

2ND FLOOR						
ELR1	1.05	X	0.40	X 1NO	=	0.42 SQ.MT.
TOTAL ELEC RM AREA PER FL.					=	0.42 SQ.MT. Y3

NET BUILT UP AREA [X1 – (Y2+Y3)]	=	219.93 SQ.MT.

STAMP AND DATE OF APPROVAL OF PLAN

THIS CANCELS APPROVAL TO PLANS SANCTIONED UNDER NO.- P-8264/2021/1269/M/W WARD/ CHEMBUR-W/337/(OS)/NEW DT. 25.01.2022.

APPROVED SUBJECT TO THE CONDITIONS MENTIONED IN THIS OFFICE LETTER NO.- P-8264/2021/1269/M/W Ward/CHEMBUR-W/337/(S)Amend.

PRASAD CHAND RAKAT GOKAVI
S.E.(B.P.) 'M'-I

Nanasaheb Ramsing Kenjale
A.E.(B.P.) 'M' WARD

Bajirao Lahu Patil
E.E.-I (B.P.) E.S.

PROFORMA B

CONTENTS OF SHEET

8TH FLOOR PLAN, 3RD TO 7TH & 9TH TO 13TH FLOOR PLANS, TERRACE FLOOR PLAN, B.U.A. DIAGRAM OF 8TH FL. SECTION AA, EE.

DESRIPTION OF PROPOSAL AND PROPERTY	NAME OF OWNER :
Proposed reconstruction redevelopment of existing structures on plot bearing CTS No. 1269, 1269/ 1 to 17 of village Chembur in Chembur Gaothan in 'M' West Ward, Chembur, Mumbai.	DINESH PARASRAM THAPAR M/s. Sampeet Properties Pvt. Ltd.

DATE	JOB. NO.	DRG. NO.	SCALE	DRAWN BY	CHECKED BY
		01	AS SHOWN	KRISHNA	N.J.SHRINGARPURE

NORTH LINE AS SHOWN

NAME, ADDRESS AND SIGNATURE OF ARCHITECT

NORTH

NAMBARCH
D/371, 10th ROAD, CHEMBUR, MUMBAI- 400 071.
tel: 022 2528 08 86.

Nandkumar Jagannath Shringarpure

Mr. N.J.SHRINGARPURE (ARCHITECT)