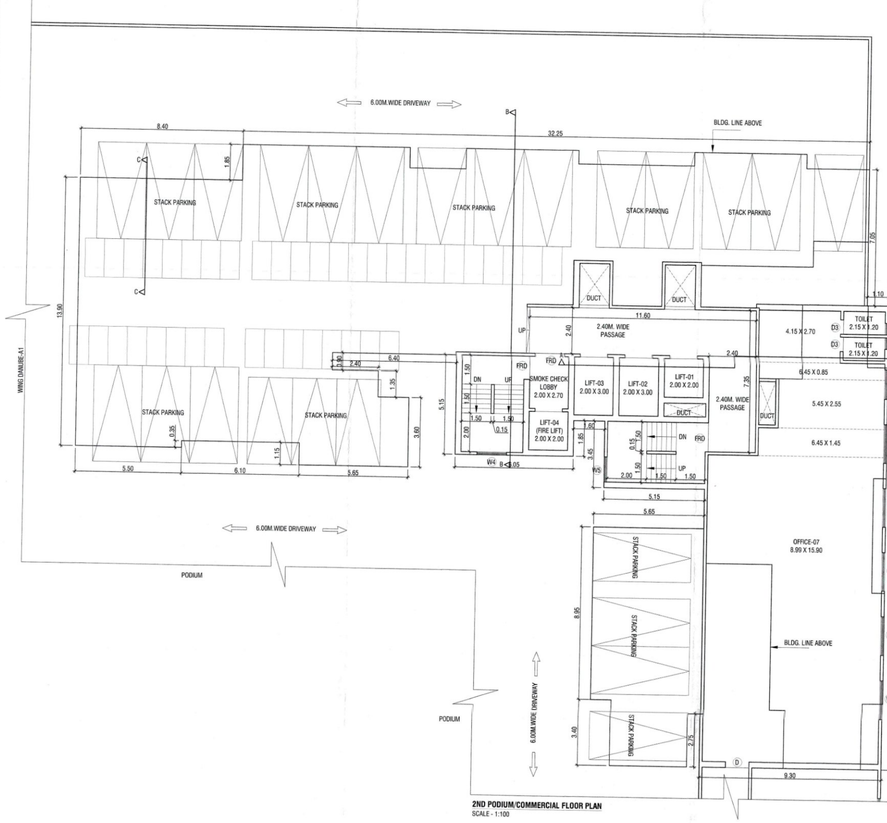
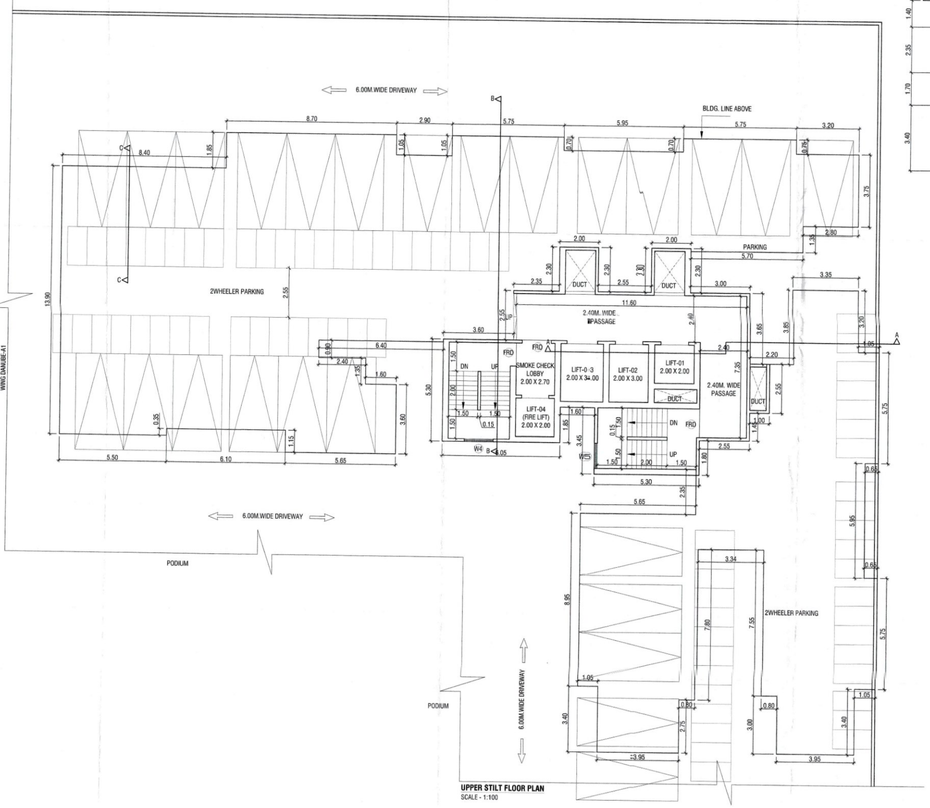
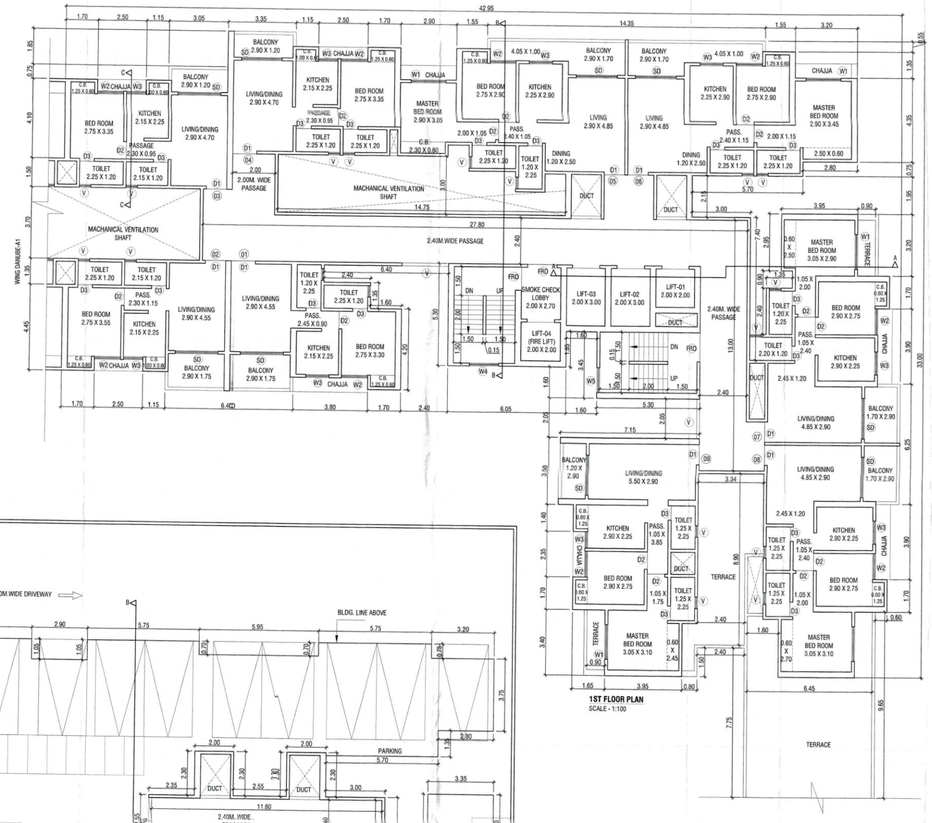


2ND PODIUM/COMMERCIAL FLOOR PLAN
SCALE - 1:100



UPPER STILT FLOOR PLAN
SCALE - 1:100



1ST FLOOR PLAN
SCALE - 1:100

FOR LOI	08
BUILDING DANUBE WING DANUBE-A2	48

CONTENTS OF SHEET

2ND PODIUM/COMMERCIAL FLOOR PLAN,UPPER STILT FLOOR PLAN & 1ST FLOOR PLAN ETC.

STAMP OF APPROVAL OF PLAN

MCGM/ES/1211/T/TARA/ Letter No. 21st Sept 2022

DISCLAIMER

TO WHOMSOEVER IT MAY CONCERN

This is to inform that this letter of intent (LoI) is issued for the sole purpose of applying for Environmental clearance from the State Environmental Impact Assessment Committee (SEIAC)as per the request of M/s.Yes Realty Developers And Agriculture Narottam Nagar Co-op Hsg Soc. Ltd (Owner) and Narottam Nagar Co-op Hsg Soc. Ltd (Owner)

The letter of intent includes redevelopment potential plot , proposed by M/s.Yes Realty Developers And Agriculture Narottam Nagar Co-op Hsg Soc. Ltd. (Owner)

and does not constitute the development permission for the said development by Thane Municipal Corporation. It is further clarified that this letter of intent does not constitute the approval to commence the development or construction or to create any third party interest. M/s.Yes Realty Developers Narottam Nagar Co-op Hsg Soc. Ltd. (Owner)

will have to obtain the statutory commencement permission as per the extant UDCPR in tune with the SEIAC obtained before any development or construction activity can be started. This letter of intent shall not form a basis for any claim of compensation, grant of rights or otherwise. This letter of intent is issued as per the extant UDCPR and is subject to any changes arising subsequently changes in UDCPR. The letter of intent is valid for one year from date of issue.

Asst. Director of Town Planning
Thane Municipal Corporation
THANE

DOOR WINDOW SCHEDULE

TYPE	SIZE	DISCRIPTION
D	1.05 X 2.10	T.W. FRAMED WITH PANNELED DOOR
D1	0.90 X 2.10	T.W. FRAMED WITH PANNELED DOOR
D2	0.75 X 2.00	T.W. FRAMED WITH PANNELED DOOR
RS	AS PER SITE X 2.40	ROLLING SHUTTER
W	2.20 X 1.20	T.W. FRAMED WITH GLAZE WINDOW
W1	1.50 X 1.20	T.W. FRAMED WITH GLAZE WINDOW
W2	1.20 X 1.20	T.W. FRAMED WITH GLAZE WINDOW
W3	1.00 X 1.20	T.W. FRAMED WITH GLAZE WINDOW
W4	2.20 X 1.20	T.W. FRAMED WITH GLAZE WINDOW
V	0.60 X 0.90	T.W. FRAMED WITH LOUVERS

DESCRIPTION OF PROPOSAL

PROPOSED DEVELOPMENT UNDER ACCOMMODATION RESERVATION POLICY ON PLOT BEARING S.NO-46, 47, 48, 49, 50/1, 51/A/1, 67/1, 115/1, 116, 117/A/1, 118/A/1, 119/A,120/A, 121, 122 AT VILLAGE MUMBRA, THANE

NAME AND ADDRESS OF OWNER/ P.O.A.H.

YES REALTY
S.NO-55,CENTRAL EMPIRE, OPP CENTRAL HEIGHTS, NEXT TO KAUSA TMC STADIUM,KAUSA MUMBRA, DISTRICT THANE-400612

NAROTTAM NAGAR CO. OPERATIVE HOUSING SOCIETY
AMRUT NAGAR,OLD PUNE ROAD,MUMBRA, TAL -THANE DIST THANE

SIGNATURE OF OWNER / P.O.A.H.

SIGNATURE OF ARCHITECT

ARCHITECTS

sahkar ARCHITECTS
2ND FLOOR, NAKSHATRA, A WING,
NEAR TMC, ALMEIDA ROAD,
PANCHPAKHADI, THANE (W), 400 602
PHONE - 2537 8701,TELEFAX - 2536 4700
E MAIL - - sasikaararchitects@yahoo.co.in

DRG.NO.	SCALE	DATE	DRN.BY	CHKD.BY
C-325/2022/LOI/08	1 : 100	03/08/2022	PRAFULLA	

I:\SERVER\Sasikaar12\Cad Drawings\NAROTTAM NAGAR - ACCOMODATION RESERVATION\06. MUNICIPAL DWG\1. FOR LOI SUBMITTED\REVISED LOI SUBMITTED\NJ\LOI-A-WING-A2.dwg