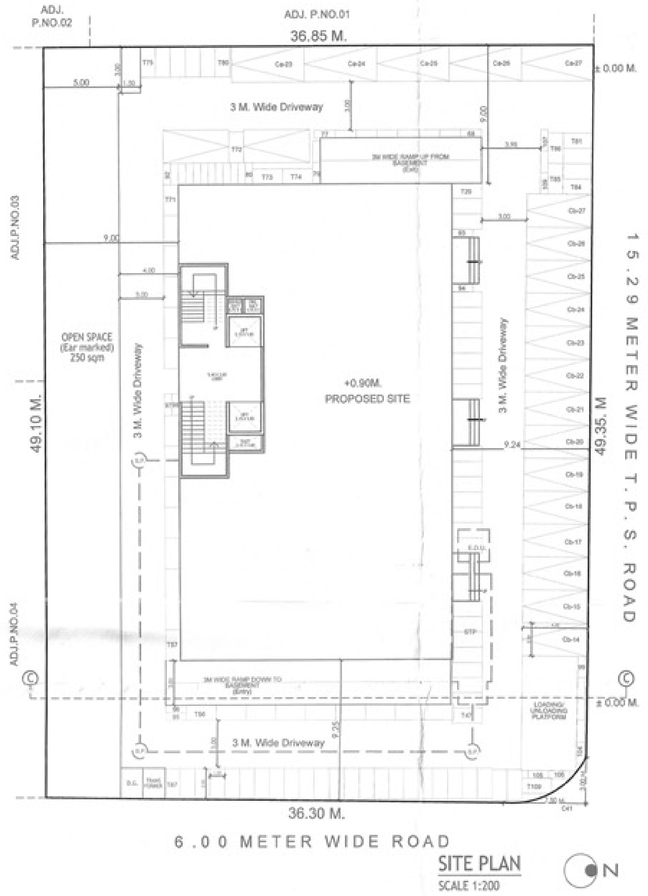

SITE PLAN
SCALE 1:200

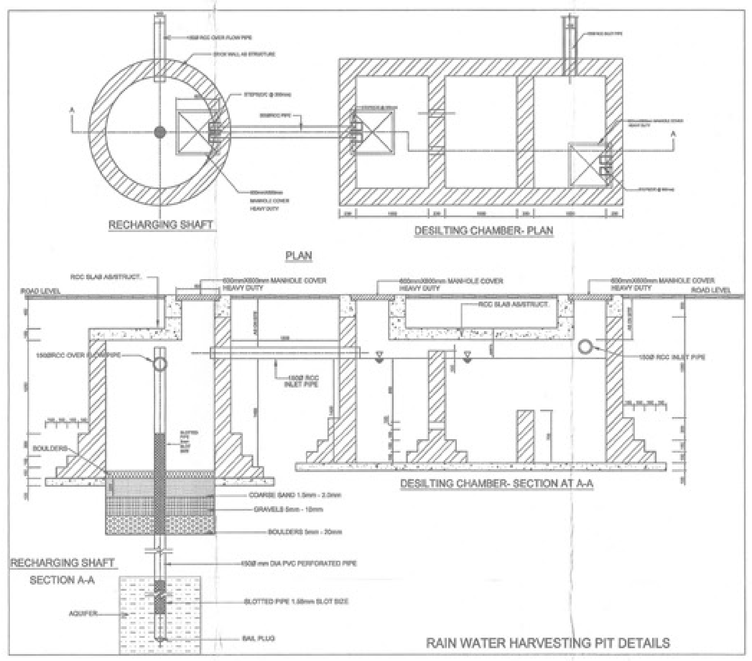

RAIN WATER HARVESTING PIT DETAILS

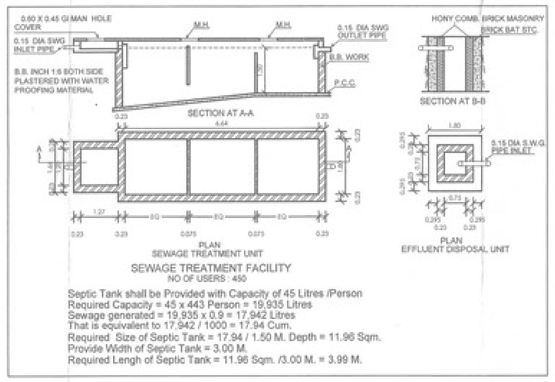

SEWAGE TREATMENT FACILITY
NO OF USERS : 450

Septic Tank shall be Provided with Capacity of 45 Litres /Person
Required Capacity = 45 x 443 Person = 19,935 Litres
Sewage generated = 19,935 x 0.9 = 17,942 Litres
That is equivalent to 17,942 / 1000 = 17.94 Cum.
Required Size of Septic Tank = 17.94 / 1.50 M. Depth = 11.96 Sqm.
Provide Width of Septic Tank = 3.00 M.
Required Lengh of Septic Tank = 11.96 Sqm. /3.00 M. = 3.99 M.

CARPET AREA CHART	
GROUND FLOOR	
SHOP	AREA SQM
1	90.00
2	90.00
3	74.25
4	69.05
5	69.05
6	90.00
TOTAL	473.55
MEZZANINE	
SHOP	AREA SQM
1	45.00
2	45.00
3	37.13
4	31.13
5	33.33
6	45.00
TOTAL	236.79
1st FLOOR	
1	63.30
2	54.00
3	45.75
4	45.75
5	45.75
6	45.75
7	75.00
TOTAL	408.60
2nd,4th,5th,6th & 7th FLOOR	
1	75.60
2	54.00
3	75.60
	205.20
TOTAL	1026.00
3rd FLOOR	
1	123.66
AMENITY	83.16
TOTAL	206.82
8th FLOOR	
1	377.25
TOTAL = 2729.01 sqm	

PARKING STATEMENT.

	CARPET AREA	4 WHEELER		Total	2 WHEELER	CYCLES	LOADING/UNLOADING
COMM.	PER 100 SQM	2			4	4	PER 1000 SQM OF SHOPS
REQUIRED	2729.01 SQM	2.50 x 5.00 Co 27 Nos.	2.30 x 4.50 Cb 27 Nos.	54 Nos.	109 Nos.	109 Nos.	1 No.
TOTAL PROVIDED PARKING				54 Nos.	109 Nos.	109 Nos.	1 No.

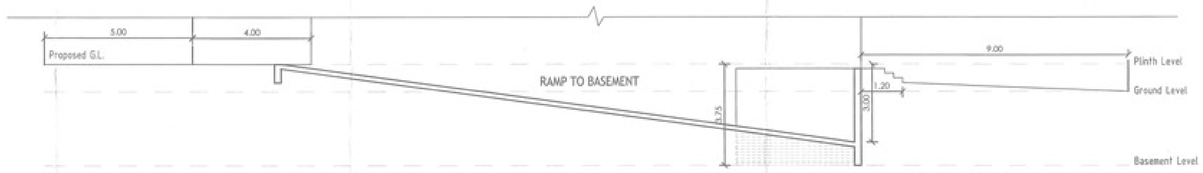

SECTION C-C SCALE 1:100

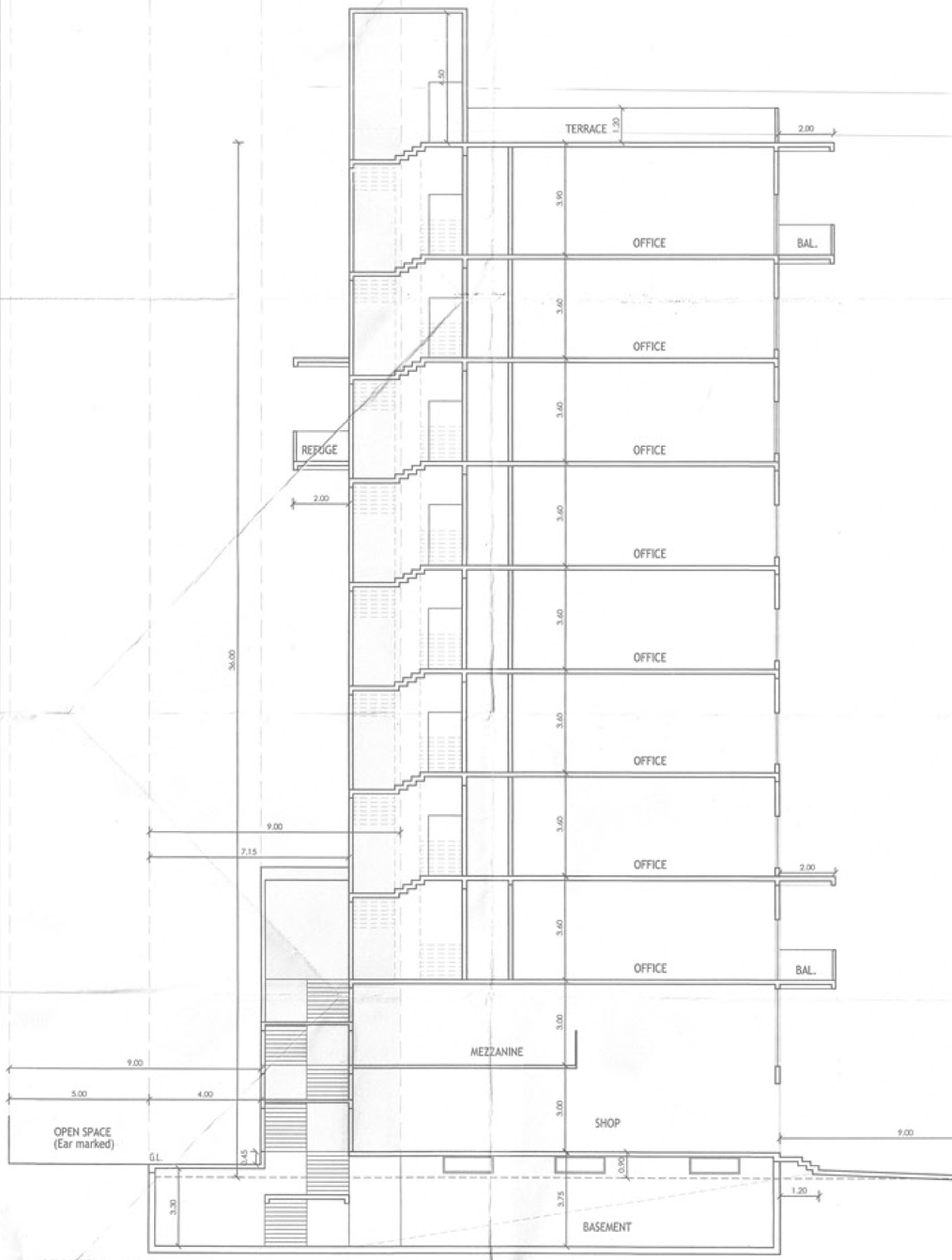

SECTION - AA
SCALE 1:100

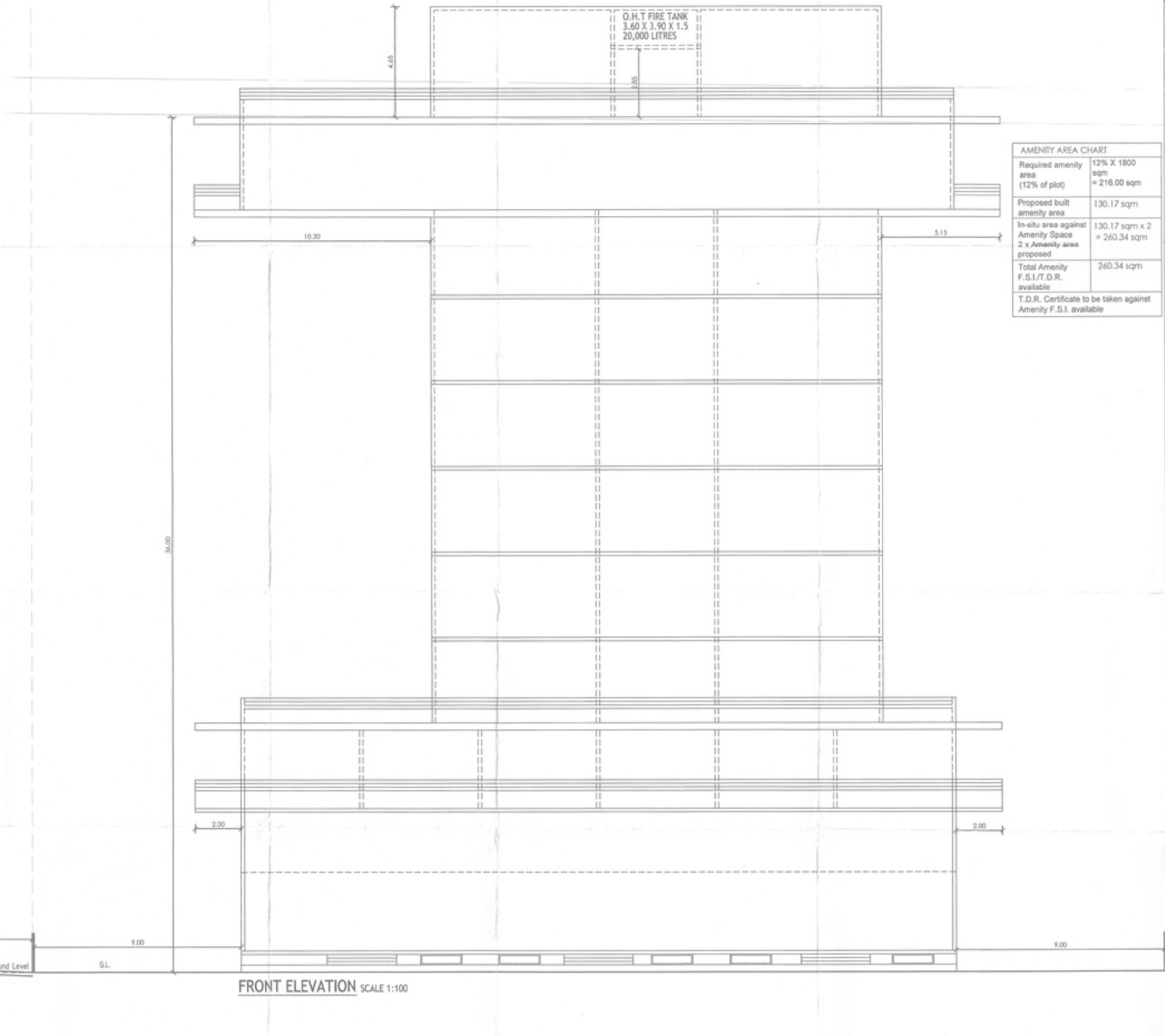

FRONT ELEVATION SCALE 1:100

AMENITY AREA CHART	
Required amenity area (12% of plot)	12% X 1800 sqm = 216.00 sqm
Proposed built amenity area	130.17 sqm
In-situ area against Amenity Space 2 x Amenity area proposed	130.17 sqm x 2 = 260.34 sqm
Total Amenity F.S.I./T.D.R. available	260.34 sqm
T.D.R. Certificate to be taken against Amenity F.S.I. available	

APPROVAL STAMP 1/3

APPROVED
The Plans amended in...
As per the conditions Mentioned in the accompaning commencement Certificate No. dated ...
NA/119/1894 | 27/03/2018
Executive Engineer
-TOWN PLANING-
Nashik Municipal Corporation
Nashik

LEGEND	
Plot boundary shown in black color	———
Drainage line shown in red dotted color	- - - - -
Proposed construction shown in red color	———
Area under hardship shown in grey color	



LOCATION PLAN
SCALE 1 : 10000

AREA STATEMENTS

1.	AREA OF PLOT (Minimum area of a,b,c, to be considered)	1800.00
	a) As per ownership document (7/12, CTS extract)	1800.00
	b) As per measurment sheet	1800.00
	c) As per site	1800.00
2.	DEDUCTIONS FOR	
	(a) Proposed D.P. / D.P. Road Widening Area	———
	(b) Any D.P. Reservation Area	———
	(Total a+ b)	———
3.	Gross Area Of Plot (1-2)	1800.00
4.	Recreational Open Space	
	(a) Required	250.00
	(b) Proposed	250.00
5.	Amenity Space -	
	(a) Required = 12% of 1800 = 216 sqm	216.00
	(b) Proposed = 130.00 sqm built amenity	130.17
6.	Service Road And Highway Widening	
7.	Internal Road Area	
8.	Net Area Of Plot = [3 - 5(b)]	1669.83
9.	Built up area with reference to basic F.S.I as per front road width (sr.no. 8 x 1.25)	2087.29
10.	Addition of area for F.S.I.	
	(a) In-situ area against D.P. road (1.85 x 2(a))if any	———
	(b) In-situ area against Amenity Space (Built 130.17 X 2 = 260.34 sqm)	00.00
	(c) Premium FSI area (0.5 x 1669.83 = 834.91 sqm)	00.00
	(d) Permissible T.D.R. area (0.65 X 1669.83 = 1085.38 sqm) Proposed area = 1050 sqm	1050.00
	(e) Additional FSI under chapter\VIII	———
	(Total of a+ b+c+d+e)	1050.00
11.	Total area available (9+10)	3137.29
12.	Maximum utilization of F.S.I. Permissible as per Road Width (as per Regulation no. 15.4)2.25 +0.15 +Amenity	4267.93
13.	Total Built- Up Area in proposal (excluding area at Sr.No.15.b)	
	(a) Existing Built-Up Area.	
	(b) Proposed Built-Up Area.	2981.04
	(c) Excess Balcony Area counted in F.S.I.	155.46
	(d) Excess Double Height Terraces area counted in F.S.I.	
	(Total of a+ b+c+d)	3136.50
14.	F.S.I. Consumed (13/11) (should not be more than serial no.12 above	0.99
15.	Area for Inclusive Housing, if any	
	(a) Required (20% of sr. no. 9)	
	(b) Proposed	

PROPOSED VIRAJ - VERTEX
COMMERCIAL BUILDING PLAN
ON S.NO.726/1E/2, F.P.NO. 483-C, T.P.S. II OF
NASHIK SHIWAR IN NASHIK FOR
RAJENDRA RASIKLAL SHAH, PRASHANT
PITAMBAR SHINDE AND VIRAJ ESTATE PVT. LTD

CERTIFICATE OF AREA

CERTIFIED THAT THE PLOT UNDER REFERENCE WAS SURVEYED BY ME ON 01/ 01/ 2017 & DIMENSION OF ALL SIDES ETC. OF THE PLOT STATED ON PLAN ARE MEASURED ON SITE AND AREA SO WORK OUT TALLES WITH AREA STATED IN DOCUMENT OF OWNERSHIP / T.P. SCHEME RECORDS DEPARTMENT/ CITY SURVEY RECORDS.

AR. AJAY SONAR

Owner's Declaration -

I/We undersigned hereby confirm thet I/We would abide by plans sanctioned by Nashik Muncple Corporation. I/We would execute the structure as per sanctioned plans. Also I/We would execute the work under supervision of proper technical person so as to ensure the quality and safety at the work site.

Rajendra R. Shah | Prashant P. Shinde | Viraj Estate Pvt.Ltd.

Architect/ Licensed Engineer/ Supervisor Name & Signature

AR. AJAY SONAR

a for architecture
A FOR ARCHITECTURE
Ar. Ajay Sonar
COA Reg: CA/2011/53287
Phone : +91 253 2513414
Mail : info@aforarchitecture.co.in
Address : 1, Ground Floor, Brooke Heaven, beside Kanya Siddhi Ganpati Mandir, Mahalaxmi Nagar, Off. Hirawadi Road, Panchavati, Nashik - 422003

JOB NO.:	DEALT BY:
15033 VEna	Mansi
DATE: 02.03.2018	CHECKED BY: Ajay